N118

H.265 18-Channel NVR

N118 supports 18-channel access; N118 built-in MIC and Speaker, allowing voice intercom without the need to purchase additional audio equipment; it supports automatic pair IMOU cameras, make N118 connect to camera more easily; N118 supports HDMI and VGA output, and can be adapted to most displays on the market; N118 supports access to APP, allowing users to manage NVR anywhere.

18-Channels Access
Max support for 18-channel, Supports Ethernet connections

Automatic Pairing
Effortlessly connects cameras to the NVR for seamless setup

Built-in Mic and Speaker
Achieve two-way talk without extra audio devices

IMOU APP
Access NVR videos anytime, anywhere

H.265 up to 4K UHD
Supports H.265/H.264, maximum output resolution 4K

HDMI/VGA Output
Enjoy clearer and more detailed visuals

Mass Storage
Support up tp 16TB HDD for extended date retention

Third Party Agreement
Supports Onvif, Compatible with more devices

4-Channel Playback
Supports 2/4/8/16x playback and intelligent retrieval

Front View

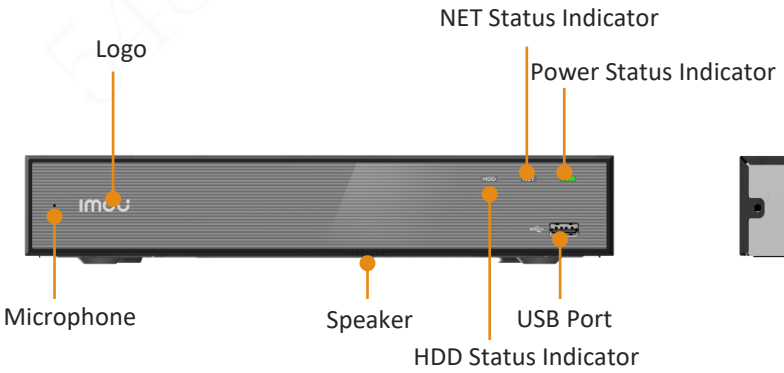

Back View

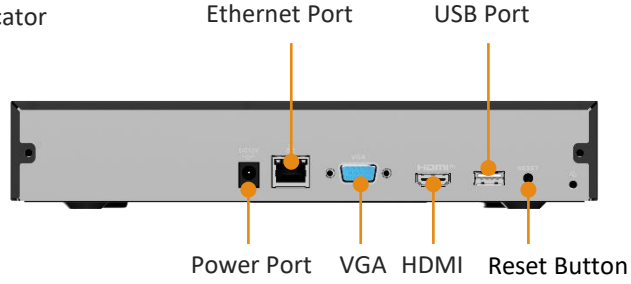

Specifications

Video & Audio

Access Channel	18 channels
Network Bandwidth	90Mbps
Playback Decoding	4-ch 8MP@15fps 4-ch 5MP@30fps
Video Compression	H.265/H.264
Audio Compression	AAC
Back-up File Format	MP4
Live Display	1,4,8,9,10,16,18

Network

Wired Network	1, RJ-45 10/100 Mbps self-adaptive Ethernet interface
Compatible APP	IMOU APP (IOS＆Android)
Third Party Agreement	Onvif

General

Power Supply	DC 12V 2A
Power Consumption	＜9W (with HDD Average Power) ＜19W (with HDD Peak Power)
Working Temperature	-10℃~+45℃
Working Humidity	Less Than 95%RH
Dimension(L×W×H)	227.5mm×260mm×45.0mm (Antenna folded)
Bare Weight	850g(Without HDD)
Certification	CE

External Interface

Video Output	1*VGA＆1*HDMI
Audio Input	1*Microphone(Built-in)
Audio Output	1*Speaker(Built-in)
USB Interface	2*USB
Reset Button	YES
Network Interface	1 RJ–45 port (10/100 Mbps)

Special Features

IPC Connection	Automatically connect to IMOU cameras
Smart Detection	Motion / Person / Vehicle
Remote Upgrade	Yes
Sound Channel	Two-Way Audio

Storage

Hard Drive Capacity	1 SATA port, up to 16 TB
Backup Media	USB Flash Drive

Topology Map

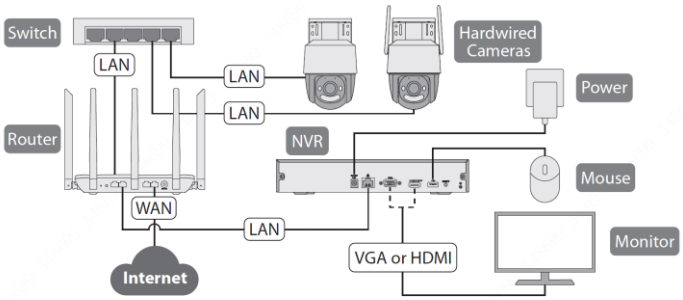

What's in the box

NVR×1	Power Adapter×1	Mouse×1
SATA Power Cable×1	SATA Data Cable×1	Ethernet Cable×1
Screw Pack×1	Quick Start Guide×1	Regulatory Information×1